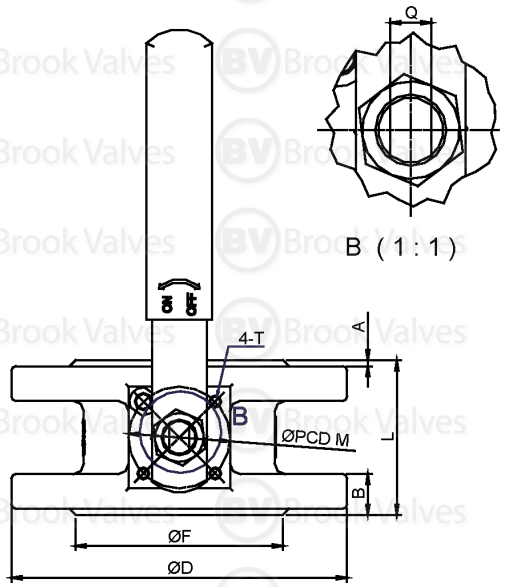

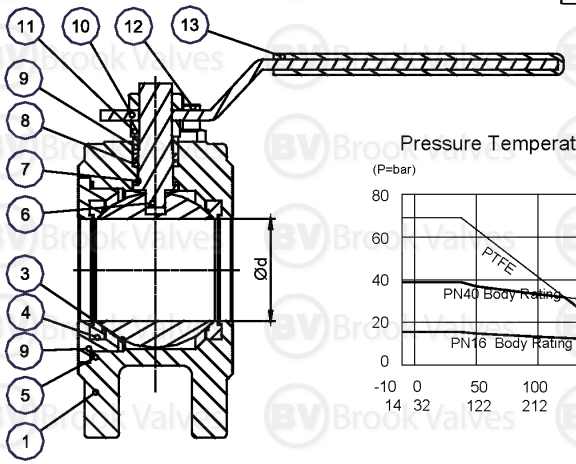

TEST PRESSURE BAR(g)	
SHELL BY HYDROSTATIC	SEAT BY AIR
60	6-8

NO	PART NAME	MATERIAL
1	BODY	ASTM A351 CF8M
2	INSERT	ASTM A351 CF8M
3	BALL	ASTM A351 CF8M
4	BALL SEAT	PTFE
5	JOINT GASKET	PTFE
6	STEM	AISI 316
7	THRUST WASHER	PTFE
8	STEM PACKING	PTFE
9	STEM RING	AISI 304
10	HANDLE	AISI 430
11	STEM NUT	AISI 304
12	STOP PIN	AISI 304
13	PLASTIC COVER	PLASTIC

Pressure Temperature Rating

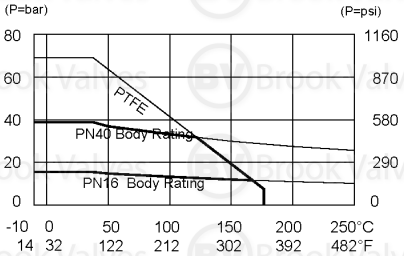

DESIGN FEATURE	
MANUFACTURE STD	B16.34, ISO 7121
END CONNECTIONS	EN1092-1
INSPECTION & TEST	API-598
PRESSURE RATING	PN40
ANTI-BLOW OUT	EN1983
ANTI-STATIC (OPTION)	ISO 7121
MOUNTING FLANGE	ISO 5211

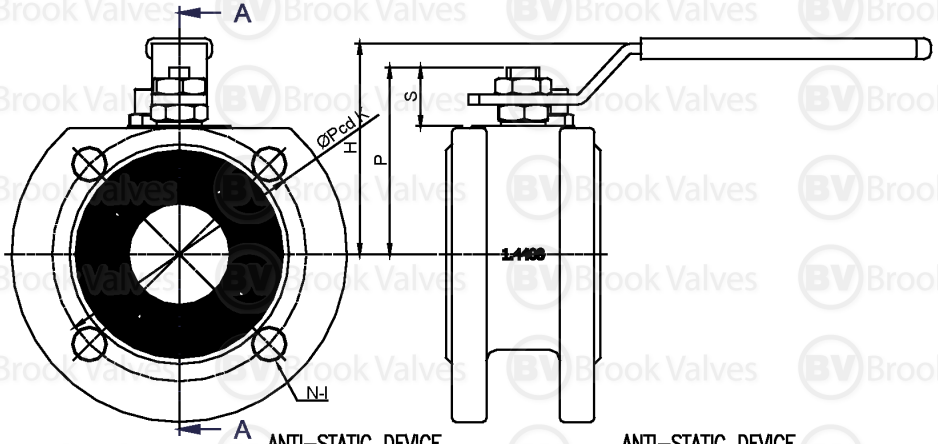

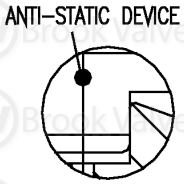

1/2"~1"
Stem & Body

1-1/4"~6"
Ball & Stem & Body

SIZE	D	B	d	F	A	N-I	H	K	L	M	P	Q	S	T	W
15	95	16	16	45	2	4 - M12	64	65	41	36	51	6.5	15.6	M5	123
20	105	18	20	58	2	4 - M12	68	75	45	36	56	6.5	16.1	M5	123
25	115	18	25	68	2	4 - M12	81	85	54	42	68	8.7	22.9	M5	158
32	140	18	32	78	2	4 - M16	88	100	58	42	75	8.7	22.9	M5	158
40	150	18	40	88	3	4 - M16	96	110	63	50	84	10	28.9	M6	198
50	165	20	50	102	3	4 - M16	104	125	76	50	92	10	28.7	M6	198
65	185	22	65	122	3	8 - M16	122	145	99	70	110	12	36.7	M8	248
80	200	24	76	138	3	8 - M16	154	160	118	70	134	12	39.2	M8	283
100	235	24	96	162	3	8 - M20	164	190	139	70	142	12	36.8	M8	333

REV A	**BROOK VALVES**	
DATE	MAY 2017	**V1FW-DIN 40**
SCALE	TO FIT	
	316SS WAFER BALL VALVE FB DIN 16-40 LEVER OP	

BV Brook Valves