SIZE	L	D1			D2			d	H	H1	H2	n-M * FULL LUG		
		T/D	T/E	ANSI 150	T/D	T/E	ANSI 150					TABLE D	TABLE E	ANSI 150
50	48	114	121		90	90	100	60	304	365	423	4 - M16	4 - M16	4 - 5/8" - UNC
80	51	146	152		122	122	132	90	366	458	542.5	4 - M16	4 - M16	4 - 5/8" - UNC
100	51	178	191		154	154	158	105	409.5	514	622	4 - M16	8 - M16	8 - 5/8" - UNC
150	57	235	241		207	211	216	158	510	645	805	8 - M16	8 - M20	8 - 3/4" - UNC
200	70	292	298		264	268	270	210	613	774	985	8 - M16	8 - M20	8 - 3/4" - UNC
250	70	356	362		328	328	324	260	737	938	1200	8 - M20	12 - M20	12 - 7/8" - UNC
300	76	406	432		370	370	370	310	835	1061	1384	12 - M20	12 - M24	12 - 7/8" - UNC
350	76	470	476		429	429	429	360	967	1224	1575	12 - M22	12 - M24	12 - 1" - UNC
400	89	521	540		480	480	480	410	1091	1382	1792	12 - M22	12 - M24	16 - 1" - UNC

NO	PART NAME	MATERIAL
1	BODY	A351 CF8M
2	SEAT	SS316+Cr
3	SEALING COVER	A351 CF8M
4	O-RING	NBR
5	O-RING	NBR
6	HEX. STUD	A193 B8
7	PACKING	PTFE
8	STUD	A193 B8
9	HEX. SCREW	A193 B8
10	SPLIT PIN	SS304
11	WASHER	SS304
12	HEX. SCREW	A193 B8
13	KEY	45
14	ROUND NUT	45
15	BEARING	STEEL
16	BEARING BLOCK	ZG25
17	STEM NUT	A439 D2
18	STEM	SS304
19	ROUND PIN	SS304
20	PLATE YOKE	SS304
21	PACKING COVER	A351 CF8M
22	RETAINER	PTFE
23	HEX. SCREW	A193 B8
24	DISC	SS316+Cr
25	HANDWHEEL	DUCTILE IRON
26	STEM TOP COVER	SS304

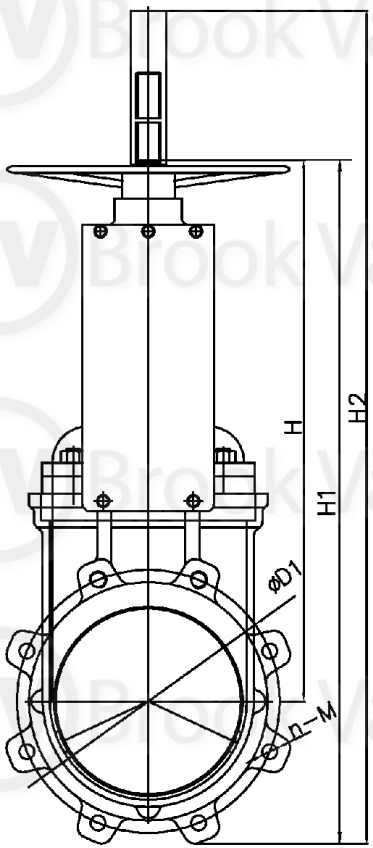

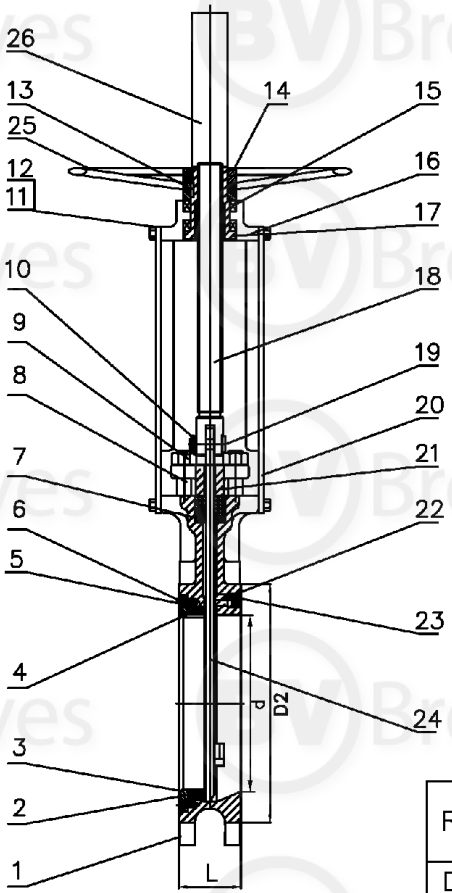

DESIGN & MFT	MSS SP-81	ENDS CONNECTION	FULL LUGGED
PRE-TEMP. RATING	ISO 7005-1	INSPECT & TEST	MSS SP-81-2001
F-F DIMENSION	MSS SP-81-2001	FLANGED DIMENSION	BS D/E, ASME 150#
MARKING	MSS-SP-25	LOGO	BV IN A CIRCLE
PAINTING	N/A	TEST PRESSURE	MSS SP-81

REV A	**BALCOMBE ENGINEERING PTY LTD**	
DATE	MAY 2012	**BKGV - METAL** RATED 10 BAR
SCALE	TO FIT	
	316 SS BODY & GATE LUGGED 316 SEAT KNIFE GATE VALVE	

Brook Valves